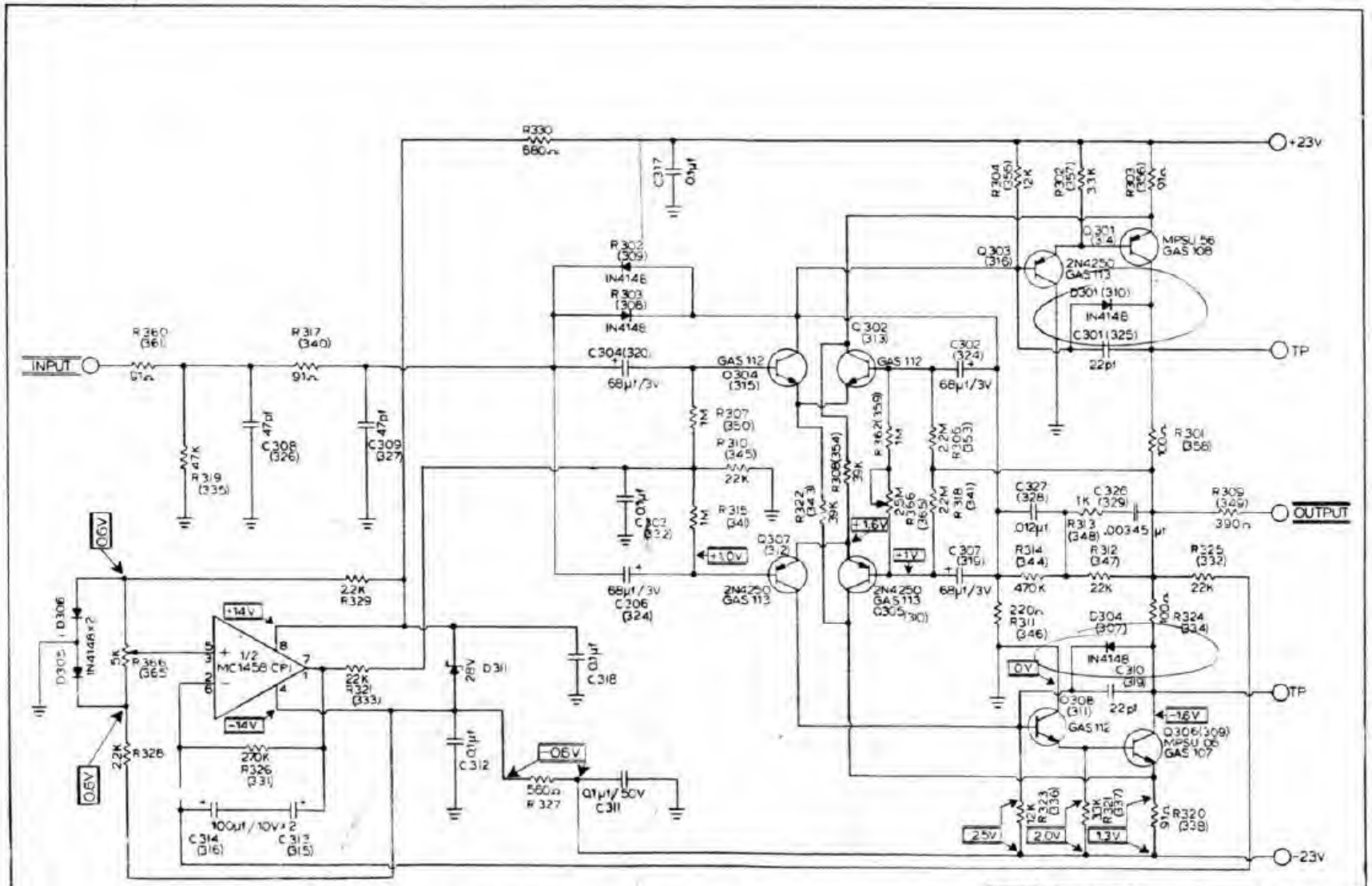

Numbers in parentheses are for Channel "A"

A	RE-DRAWN + REVISED			
REV	DESCRIPTION	DATE	DWN BY	APP BY

22940 LASSEN ST., CHATSWORTH, CALIF. U.S.A. 91311
TELEPHONE (213) 998-8100

TOLERANCE UNLESS NOTED
DEC ±.005
FRAC ± 1/64
ANGLE ±1/2°

TITLE: PHONO CIRCUIT (THOEBE THAEDRA)

SCALE — DATE 7/25/77 — DRAWN BY — CHECKED BY — APP BY — DWG. NO. — REV. A